# Outer Race Bearing Problem in a Raw Sewage Pump

## CASE HISTORY

CITY OF EDMONDS - WASTE WATER TREATMENT PLANT, EDMONDS, WA

The city of Edmonds, Washington, was constructing a new 9.1 million GPD waste water treatment facility. While the facility was not yet complete, the predictive maintenance program is well under way. The plant process begins with raw sewage pumped by as many as four large centrifugal pumps. These huge pumps are vital to the plant's operation.

With the vibration data collected during the first survey, The DLI Watchman® vibration analysis system provided timely information identifying a significant thrust bearing problem. The problem was found in the last month of the manufacturer's warranty period. With positive proof of a pump bearing problem, the maintenance department held the pump manufacturer liable for the repairs which totalled more than $6,000.

The vibration data was collected from pickup locations at each bearing on the motor and pump. The triaxial vibration data collected at the pump coupling end bearing indicated a moderate thrust bearing problem identified by a fundamental bearing tone at 7.6 times rotational rate (axial). In addition to the fundamental tone, rotation rate sidebands and significant bearing tone harmonics were observed.

A vibration test taken six weeks later showed the problem had worsened. The fundamental bearing tone had increased in amplitude by as much as 70% (in the tangential direction), while amplitudes at the higher bearing tone harmonics had increased more than three-fold (in the radial and axial directions).

The pump manufacturer was skeptical of the findings and sent a representative who arrived at the site with his own vibration test equipment. The data collector consisted of a single accelerometer, magnetic mount and a linear plot output. The collector was loaded with bearing information allowing the collector to identify bearing faults.

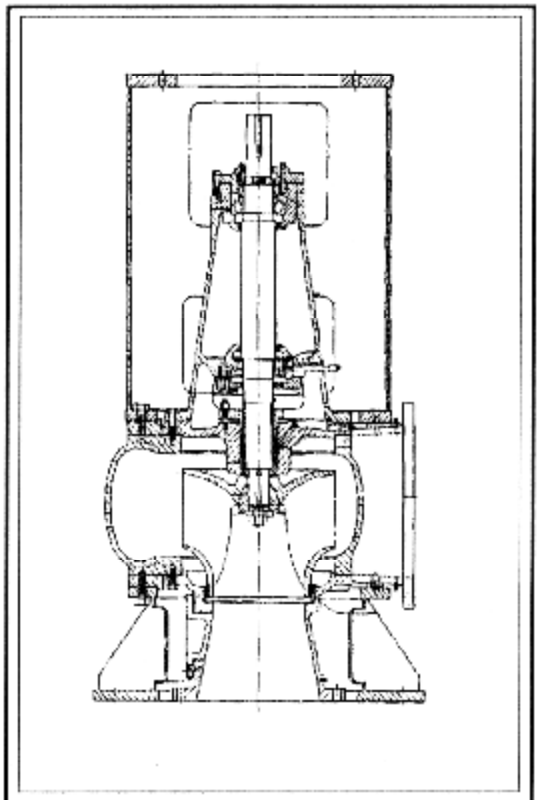

***Figure 1***
*Schematic of the Raw Sewage Pump*

The representative attached the magnetic mount to the pump bearing housing. Collecting approximately 5 seconds of data, the instrument printed a linear plot and announced a possible bearing problem. Another "snapshot" of data was taken and the collector announced no bearing problem. The data sampling continued and at the conclusion of the tests, the representative was left unsure of any bearing fault. The linear strip chart plots showed a clear peak at rotational rate, but no clear bearing related tones, leaving no means to identify a problem.

While he could not prove there was a bearing problem, he could not prove that there wasn't, either, and was reluctant to take responsibility for the repairs. Edmonds' maintenance supervisor insisted that repairs be made. The upper thrust bearing was found to have significant outer race damage. The timely repairs not only saved the City of Edmonds a considerable repair bill, but allowed the maintenance department to schedule repair of a small problem before it resulted in more substantial damage.

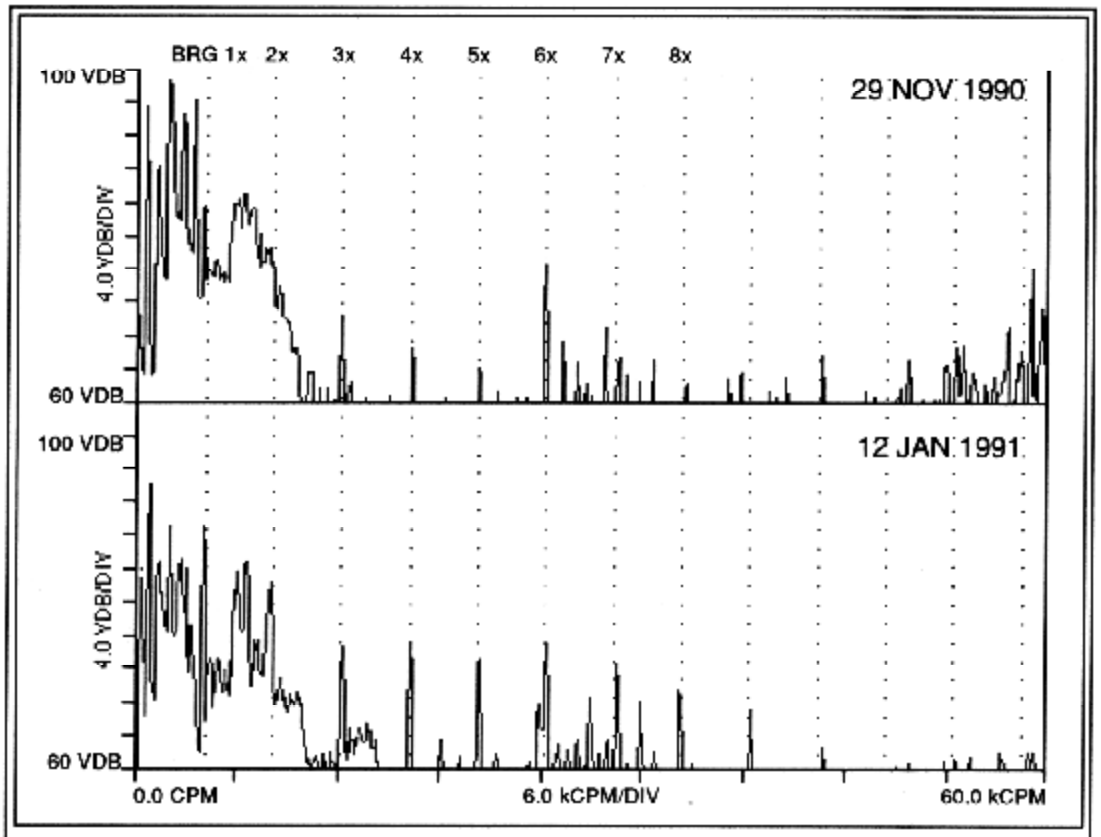


*Figure 2*
*Spectral Data Showing the Development of Outer Race Damage in the Upper Thrust Bearing*