# Intrinsically Safe Loop Power Sensor, Velocity, 4-20 mA, Top Exit Connector/Cable

Actual Product Size Shown

II 1 G D

0518

## Product Features

### Continuous Monitoring in Hazardous Locations

**CSA and ATEX Approvals**

- *Works with Standard Cables*
- *Requires Energy Limiting Barriers such as IS111 or IS211 Series*
- *Enables Vibrational Alarms for Process Control*

## LP802-1B

2 Pin Connector

| Connector Pin | Polarity |
|---|---|
| A | (+) Loop Power mA Output |
| B | (-) Common |

## LP802-3C

Armored Integral Cable

| Conductor | Polarity |
|---|---|
| Red | (+) Loop Power mA Output |
| Black | (-) Common |
| Shield | Cable Drain Wire |

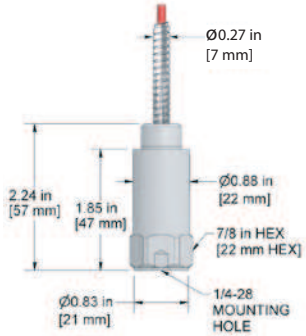


## LP802-9C

Integral Cable

| Conductor | Polarity |
|---|---|
| Red | (+) Loop Power mA Output |
| Black | (-) Common |
| Shield | Cable Drain Wire |

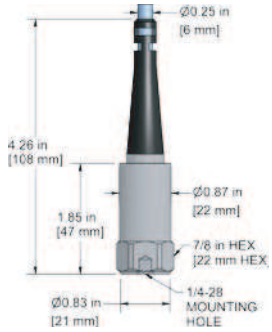


| Specifications | Standard | Metric |
|---|---|---|
| Output, 4-20 mA Measurement Range | See Selection Guide | |
| **Tolerances** | | |
| 4 mA | (± 5%) | |
| 20 mA | (± 10%) | |
| **Electrical** | | |
| Settling Time (Turn on Time) @ Room Temp (68ºF/20ºC) | <60 Seconds | |
| Power Requirement (Loop Powered) Voltage Source | 12-28 VDC | |
| Electrical Case Isolation | $>10^8$ ohm | |
| **Environmental** | | |
| Temperature Range | -40 to 175°F | -40 to 80°C |
| Electromagnetic Sensitivity | CE | |
| Sealing | IP68 | |

| Specifications | Standard | Metric |
|---|---|---|
| **Physical** | | |
| Sensing Element | PZT Ceramic | |
| Sensing Structure | Shear Mode | |
| Weight ( without cable) | 3.7 oz | 105 grams |
| Case Material | 316L Stainless Steel | |
| Mounting Hole | 1/4-28 | |
| Connector (LP802-1B) | 2 Pin MIL-C-5015 | |
| Armored Cable (LP802-3C) | Armor Jacketed Cable | |
| Integral Cable (LP802-9C) | RAL 5015 Blue Polyurethane Cable | |
| **Mechanical** | | |
| Mounting Torque | 2 to 5 ft. lbs. | 2,7 to 6,8 Nm |
| **Supplied Accessories** | | |
| Mounting Hardware | 1/4-28 Stud | M6x1 Adapter Stud |
| **Calibration Certificate** | Current Output @ 100 Hz | |

## Ordering Information

All Products Are Built To Order

[ ] /LP802 - [ ] [ ] [ ] - [ ][ ] / [ ][ ][ ] / [ ][ ][ ] -Z

| Stud Type | Measurement Range | Range Type | Frequency Range +/- 3dB | Style | Armor Length (Integral) | Cable Length (Integral) |
|---|---|---|---|---|---|---|
| **M** = M6x1<br>(blank for 1/4-28) | **0** = 0-0.5 IPS (0-12,7 mm/sec)<br>**1** = 0-1 IPS (0-25,4 mm/sec)<br>**2** = 0-2 IPS (0-50,8 mm/sec)<br>**3** = 0-10 mm/sec (0-0,4 IPS)<br>**4** = 0-20 mm/sec (0-0,8 IPS) | **R** = RMS<br>**P** = Peak | **1** = 600-60,000 CPM (10-1000 Hz)<br>**2** = 180-150,000 CPM (3-2500 Hz) | **1B** = 2 Pin MIL C-5015<br>**3C** = Armor Jacket Integral Cable<br>**9C** = CB193 Integral Cable | **010** = 10 ft. (3 m)<br>**020** = 20 ft. (6 m)<br>**030** = 30 ft. (9 m)<br>**050** = 50 ft. (15 m)<br>**100** = 100 ft. (30 m)<br>*(Custom lengths available upon request)* | **010** = 10 ft. (3 m)<br>**020** = 20 ft. (6 m)<br>**030** = 30 ft. (9 m)<br>**050** = 50 ft. (15 m)<br>**100** = 100 ft. (30 m)<br>*(Custom lengths available upon request)* |

**Read Before Purchasing:**
Important information on Regulatory Approvals and Requirements on Page 337 & 338

PROTECTION & RELIABILITY OPTIMIZATION INSTRUMENTS
CONNECT TO CONFIDENCE

*Lifetime Warranty on Materials & Workmanship*



• 800-999-5290