Dual Output Sensor, Loop Power 4-20 mA, Velocity, Dynamic Velocity, Top Exit Connector/Cable

Actual Product Size Shown

Product Features

Offers Continuous Protection Plus Dynamic Outputs for Diagnostics

IEPE sensor power not required

- *4-20 mA Velocity and Dynamic Velocity Outputs*
- *Analytical Tool*
- *Outputs to PLC, DCS, SCADA*

LP401-1B
3 Pin Connector

Connector Pin	Polarity
A	(+) Loop Power mA Output
B	(-) Common
C	(+) Dynamic Velocity Output

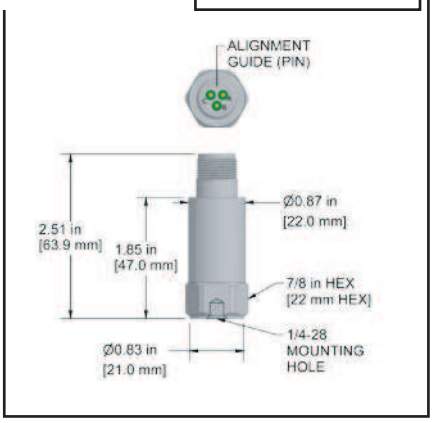

LP401-2C
Integral Cable

Conductor	Polarity
Red	(+) Loop Power mA Output
Black	(-) Common
White	(+) Dynamic Velocity Output
Shield	Cable Drain Wire

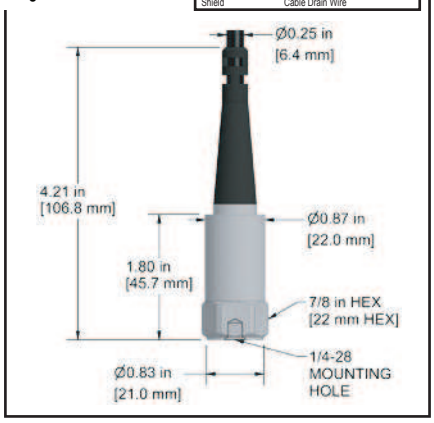

LP401-3C
Armored Integral Cable

Conductor	Polarity
Red	(+) Loop Power mA Output
Black	(-) Common
White	(+) Dynamic Velocity Output
Shield	Cable Drain Wire

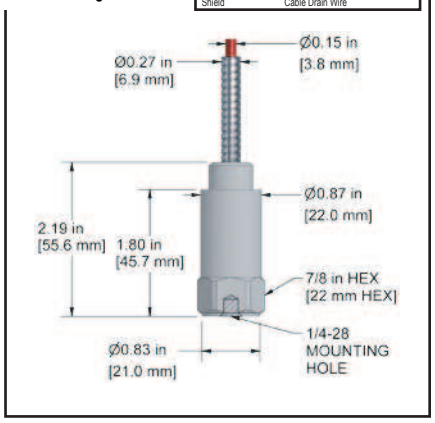

Specifications	Standard	Metric
Output, 4-20 mA Measurement Range	See Selection Guide	
Tolerances		
4 mA	(± 5%)	
20 mA	(± 10%)	
Dynamic Output Velocity	IEPE sensor power not required	
Sensitivity ± 10%	100 mV/in/sec	4 mV/mm/sec
Frequency Response ± 3 dB	120-600,000 CPM	2,0-10000 Hz
Electrical		
Settling Time (Turn on Time) @ Room Temp (68°F/20°C)	<60 Seconds	
Power Requirement (Loop Powered) Voltage Source	12-28 VDC	
Electrical Case Isolation	>10^8 ohm	
Environmental		
Temperature Range	-40 to 185°F	-40 to 85°C
Electromagnetic Sensitivity	CE	
Sealing	IP68	
Submersible Depth (LP401-2C/3C)	200 ft.	60 m

Specifications	Standard	Metric
Physical		
Sensing Element	PZT Ceramic	
Sensing Structure	Shear Mode	
Weight (without cable)	3.7 oz	105 grams
Case Material	316L Stainless Steel	
Mounting Hole	1/4-28	
Connector (LP401-1B)	3 Pin MIL-C-5015	
Integral Cable (LP401-2C)	Polyurethane Jacketed Cable	
Armored Cable (LP401-3C)	Armor Jacketed Cable	
Mechanical		
Mounting Torque	2 to 5 ft. lbs.	2,7 to 6,8 Nm
Supplied Accessories		
Mounting Hardware	1/4-28 Stud	M6x1 Adapter Stud
Calibration Certificate	CA10 (dynamic) Current Output @ 100 Hz	

All Products Are Built To Order

Ordering Information

[ ]/LP401 - [ ] [ ] [ ] - [ ][ ] / [ ][ ][ ] / [ ][ ][ ] -Z

Stud Type	Measurement Range	Range Type	Frequency Range +/- 3dB	Style	Armor Length (Integral)	Cable Length (Integral)
M = M6x1	**0** = 0-0.5 IPS (0-12,7 mm/sec)	**R** = RMS	**1** = 600-60,000 CPM (10-1000 Hz)	**1B** = 3 Pin MIL C-5015	**010** = 10 ft. (3 m)	**010** = 10 ft. (3 m)
	1 = 0-1 IPS (0-25,4 mm/sec)	**P** = Peak	**2** = 180-150,000 CPM (3-2500 Hz)	**2C** = Integral Cable	**020** = 20 ft. (6 m)	**020** = 20 ft. (6 m)
(blank for 1/4-28)	**2** = 0-2 IPS (0-50,8 mm/sec)			**3C** = Armor Jacket	**030** = 30 ft. (9 m)	**030** = 30 ft. (9 m)
	3 = 0-10 mm/sec (0-0,4 IPS)				**050** = 50 ft. (15 m)	**050** = 50 ft. (15 m)
	4 = 0-20 mm/sec (0-0,8 IPS)				**100** = 100 ft. (30 m) *(Custom lengths available upon request)*	**100** = 100 ft. (30 m) *(Custom lengths available upon request)*