Intrinsically Safe Accelerometer, Top Exit Connector/Cable, 100 mV/g

Actual Product Size Shown

II 1 G D

Requires Intrinsically Safe Barrier

Product Features

CSA/ATEX Approved

High Performance at a Reasonable Price

- *0,5 - 15000 Hz (30 - 900,000 CPM) Frequency Response*
- *100 mV/g Sensitivity ±10%*
- *Requires Intrinsic Safety Barrier (see page 348)*

AC905-1A
2 Pin Connector

Connector Pin	Polarity
A	(+) Signal / Power
B	(-) Common

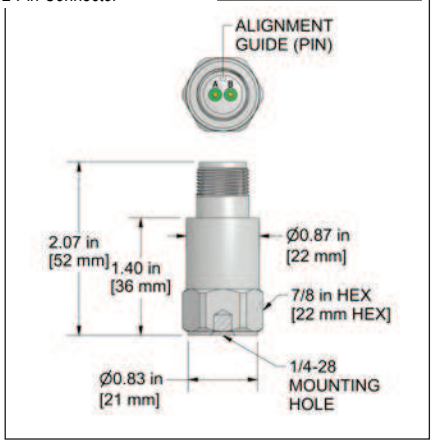

AC905-3C
Armored Integral Cable

Conductor	Polarity
Red	(+) Signal / Power
Black	(-) Common
Shield	Cable Drain Wire

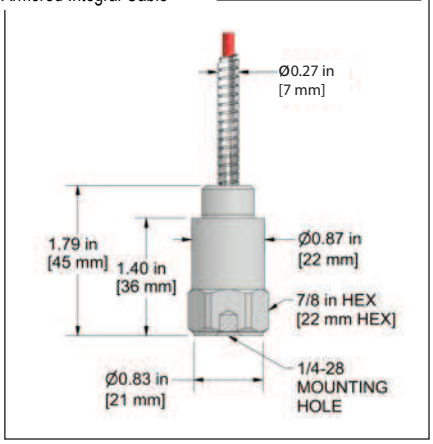

AC905-9C
Integral Cable

Conductor	Polarity
Red	(+) Signal / Power
Black	(-) Common
Shield	Cable Drain Wire

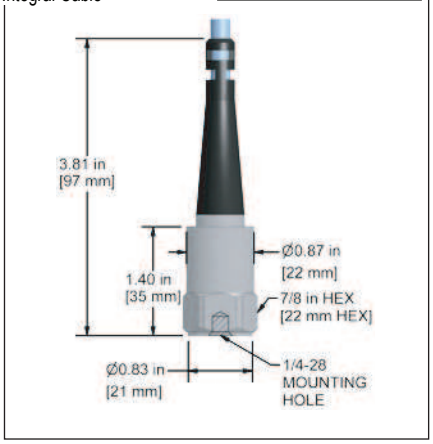

Specifications	Standard	Metric
Part Number	AC905	M/AC905
Sensitivity (±10%)	100 mV/g	
Frequency Response (±3dB)	30-900,000 CPM	0,5-15000 Hz
Frequency Response (±10%)	60-600,000 CPM	1,0-10000 Hz
Dynamic Range	± 50 g, peak	
Electrical		
Settling Time	<3 Seconds	
Voltage Source (IEPE)	18-28 VDC	
Constant Current Excitation	2-10 mA	
Spectral Noise @ 10 Hz	6.5 µg/√Hz	
Spectral Noise @ 100 Hz	2 µg/√Hz	
Spectral Noise @ 1000 Hz	1.8 µg/√Hz	
Output Impedance	<100 ohm	
Bias Output Voltage	10-14 VDC	
Case Isolation	$>10^8$ ohm	

Specifications	Standard	Metric
Environmental		
Temperature Range	-58 to 250°F	-50 to 121°C
Maximum Shock Protection	5,000 g, peak	
Electromagnetic Sensitivity	CE	
Sealing	IP68	
Physical		
Sensing Element	PZT Ceramic	
Sensing Structure	Shear Mode	
Weight	3.2 oz	90 grams
Case Material	316L Stainless Steel	
Mounting	1/4-28	
Connector (AC905-1A) Armored Cable (AC905-3C) Integral Cable (AC905-9C)	2 Pin MIL-C-5015 Armor Jacketed Cable RAL 5015 Blue Polyurethane Cable	
Resonant Frequency	1,380,000 CPM	23000 Hz
Mounting Torque	2 to 5 ft. lbs.	2,7 to 6,8 Nm
Mounting Hardware	1/4-28 Stud	M6x1 Adapter Stud
Calibration Certificate	CA10	

Ordering Information

Standard	AC905-1A (1/4-28 Stud) Stock Product	AC905-3C - / (1/4-28 Stud) Build To Order [ ][ ][ ] - [ ] (length in feet) (termination)	AC905-9C - / (1/4-28 Stud) Build To Order [ ][ ][ ] / [ ][ ][ ] - [ ] (maximum armor length 100 ft.) (cable length in feet) (termination)
Metric	M/AC905-1A (M6x1 Adapter Stud) Stock Product	M/AC905-3C - / (M6x1 Adapter Stud) Build To Order [ ][ ][ ] - [ ] (length in feet) (termination) [ ][ ][ ] M - [ ] (length in meters) (termination)	M/AC905-9C - / (M6x1 Adapter Stud) Build To Order [ ][ ][ ] / [ ][ ][ ] - [ ] (maximum armor length 100 ft.) (cable length in feet) (termination) [ ][ ][ ] M / [ ][ ][ ] M / [ ] (maximum armor length 30 m) (cable length in meters) (termination)

Read Before Purchasing
Important information on Regulatory Approvals and Requirements
on Pages 70 & 71

Cable Termination Options: L Z