IEC Certified (IECEx), Loop Power Sensor, Acceleration, 4-20 mA, Top Exit Connector/Cable

IECEx

Actual Product Size Shown

Product Features

Continuous Monitoring in Hazardous Locations

- *Requires Energy Limiting Barriers such as IS111 or IS211 Series*
- *Works with Standard Cables*
- *IECEx Certification*

LP952-1B 2 Pin Connector

Connector Pin	Polarity
A	(+) Loop Power mA Output
B	(-) Common

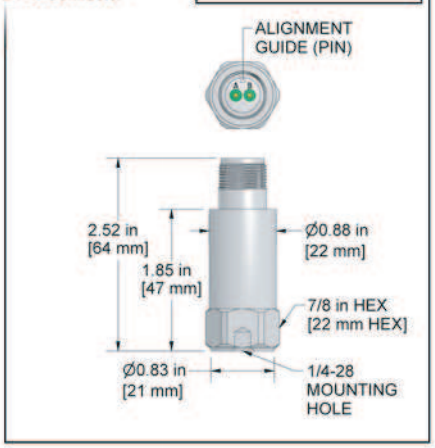

LP952-2C Integral Cable

Conductor	Polarity
Red	(+) Loop Power mA Output
Black	(-) Common
Shield	Cable Drain Wire

LP952-3C Armored Integral Cable

Conductor	Polarity
Red	(+) Signal / Power
Black	(-) Common
Shield	Cable Drain Wire

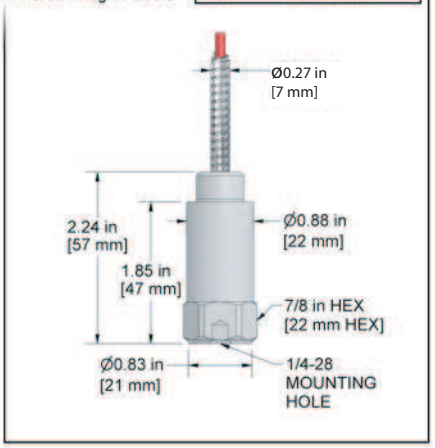

Specifications	Standard	Metric
Output, 4-20 mA Measurement Range	See Selection Guide	
Tolerances		
4 mA	(± 5%)	
20 mA	(± 10%)	
Electrical		
Settling Time (Turn on Time) @ Room Temp (68ºF/20ºC)	<60 Seconds	
Power Requirement (Loop Powered) Voltage Source	12-28 VDC	
Electrical Case Isolation	$>10^8$ ohm	
Environmental		
Temperature Range	-40 to 176°F	-40 to 80°C
Electromagnetic Sensitivity	CE	
Sealing	IP68	

Specifications	Standard	Metric
Physical		
Sensing Element	PZT Ceramic	
Sensing Structure	Shear Mode	
Weight (without cable)	3.7 oz	105 grams
Case Material	316L Stainless Steel	
Mounting Hole	1/4-28	
Connector (LP952-1B)	2 Pin MIL-C-5015	
Integral Cable (LP952-2C)	Polyurethane Jacketed Cable	
Armored Cable (LP952-3C)	Armor Jacketed Cable	
Mechanical		
Mounting Torque	2 to 5 ft. lbs.	2,7 to 6,8 Nm
Supplied Accessories		
Mounting Hardware	1/4-28 Stud	M6x1 Adapter Stud
Calibration Certificate	Current Output @ 100 Hz	

Ordering Information

All Products Are Built To Order

[ ] /LP952 - [ ] [ ] [ ] - [ ][ ] / [ ][ ][ ] / [ ][ ][ ] -Z

Stud Type	Measurement Range	Range Type	Frequency Range +/- 3dB	Style	Armor Length (Integral)	Cable Length (Integral)
M = M6x1 (blank for 1/4-28)	**0** = 0-1 g **2** = 0-2 g **5** = 0-5 g **10** = 0-10 g **20** = 0-20 g	**R** = RMS **P** = Peak	**1** = 600-60,000 CPM (10-1000 Hz) **2** = 180-150,000 CPM (3-2500 Hz)	**1B** = 2 Pin MIL C-5015 **2C** = Integral Cable **3C** = Armor Jacket	**010** = 10 ft. (3 m) **020** = 20 ft. (6 m) **030** = 30 ft. (9 m) **050** = 50 ft. (15 m) **100** = 100 ft. (30 m) *(Custom lengths available upon request)*	**010** = 10 ft. (3 m) **020** = 20 ft. (6 m) **030** = 30 ft. (9 m) **050** = 50 ft. (15 m) **100** = 100 ft. (30 m) *(Custom lengths available upon request)*

Read Before Purchasing:
Important information on Regulatory Approvals and Requirements on Page 343

Lifetime Warranty on Materials & Workmanship